The intelligent gearbox –
more performance and predictable maintenance

Dietmar Tilch, ZF Industrieantriebe Witten GmbH

MDA Forum, Hannover Fair 2017

Wind Power Technology In ZF Group

Mobility across the board

ZF organization is divided into 7 major divisions:

Car Powertrain Technology	Car Chassis Technology	Commercial Vehicle Technology	Industrial Technology	E-Mobility	ZF Aftermarket	Active & Passive Safety Technology
			Off-Highway Systems Test Systems Special Driveline Technology Marine Propulsion Systems Aviation Technology **Wind Power Technology** Industrial Drives			

ZF Puts Wind Energy In Motion

Joining forces for the new generation of wind energy

ZF *Global Leading Position*

In the gearbox industry since
1979

Manufacturing capacity on annual basis
~ 18,000 MW

Worldwide manufacturing & service coverage
Balanced global

Manufacturing depth and processes
All critical processes in-house

Global installed base
> 100,000 MW whereof 3 MW segment > 15,000 MW

Product portfolio – on- and offshore
0.8 MW - 8.0 MW

Full Service Offering
Dedicated service centers in all major wind market


> 100 GW
ZF gearbox capacity installed
> 55.000
Gearboxes
Single point of contact for ~25%* of worldwide installed wind capacity
*) ~400GW of geared wind turbines installed (end 2016, cumulative); thereof >100GW installed by ZF Wind Power

The Wind Power Gearbox as an Intelligent Mechanical System

Essential operation parameters

- Speed
- Torque
- Temperatures
- Lubrication status

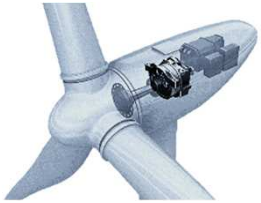

Multiple Sensor Network

- Dynamic Load Monitor
- Vibration
- Oil parameters
- Cameras
- etc.

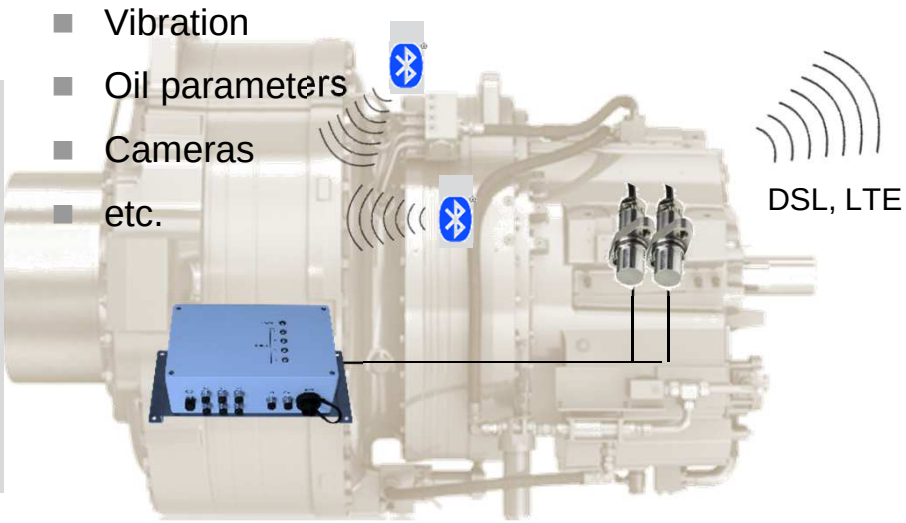

On-site data evaluation and communication to

- turbine controller (real time)
- Cloud: predictive maintenance

Cloud services provide data overview, history and trends as well as:

- Automated detection of abnormalities
- Remaining lifetime calculations
- Remote monitoring information

Dynamic Load Monitoring
Torque Measurement Principle

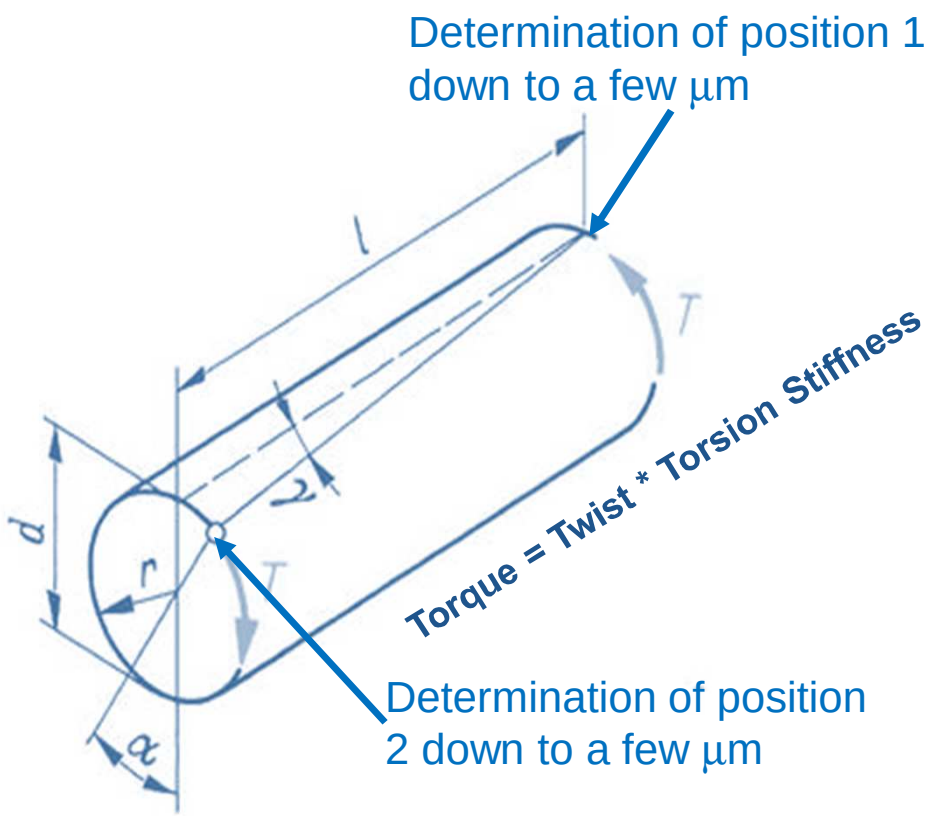

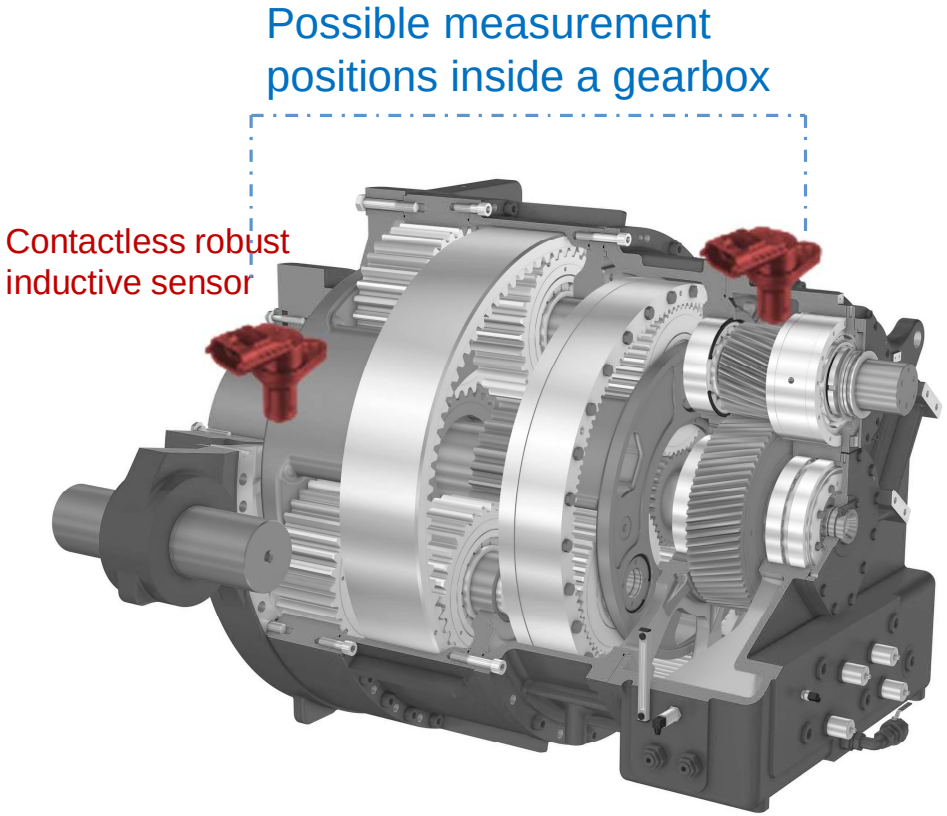

Potential For Energy Yield Increase

Based on individual wind turbine drive train load measurement

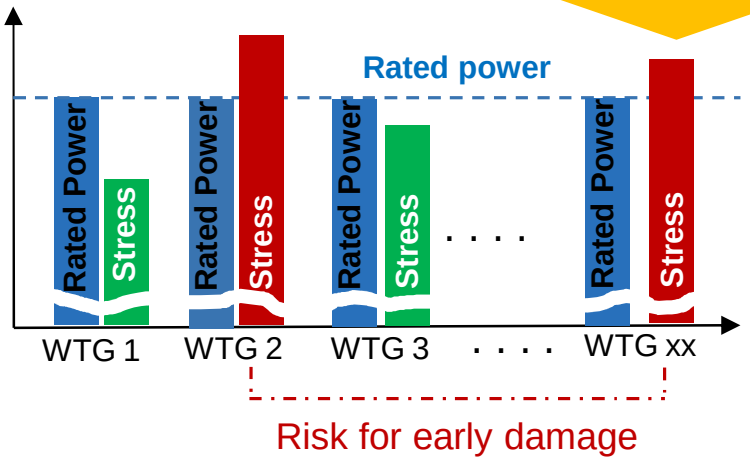

With individual drive train load measurement

Higher energy yield without risk

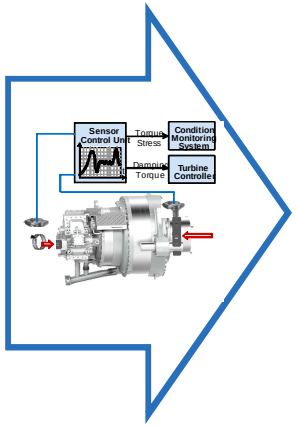

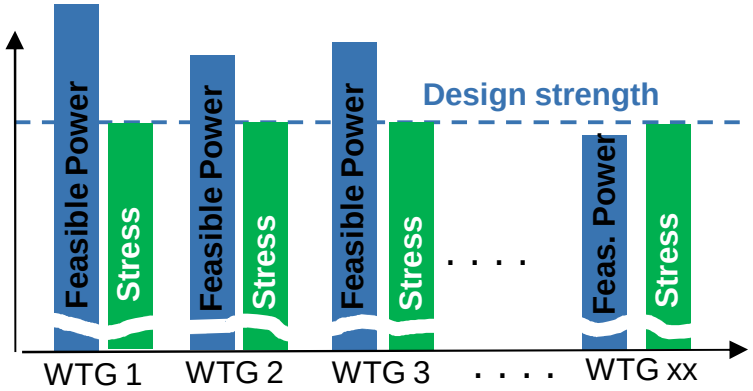

Optimal Drive Train Load Reduction Based On Closed Loop Control

Gearbox as an ideal drive train load measurement position

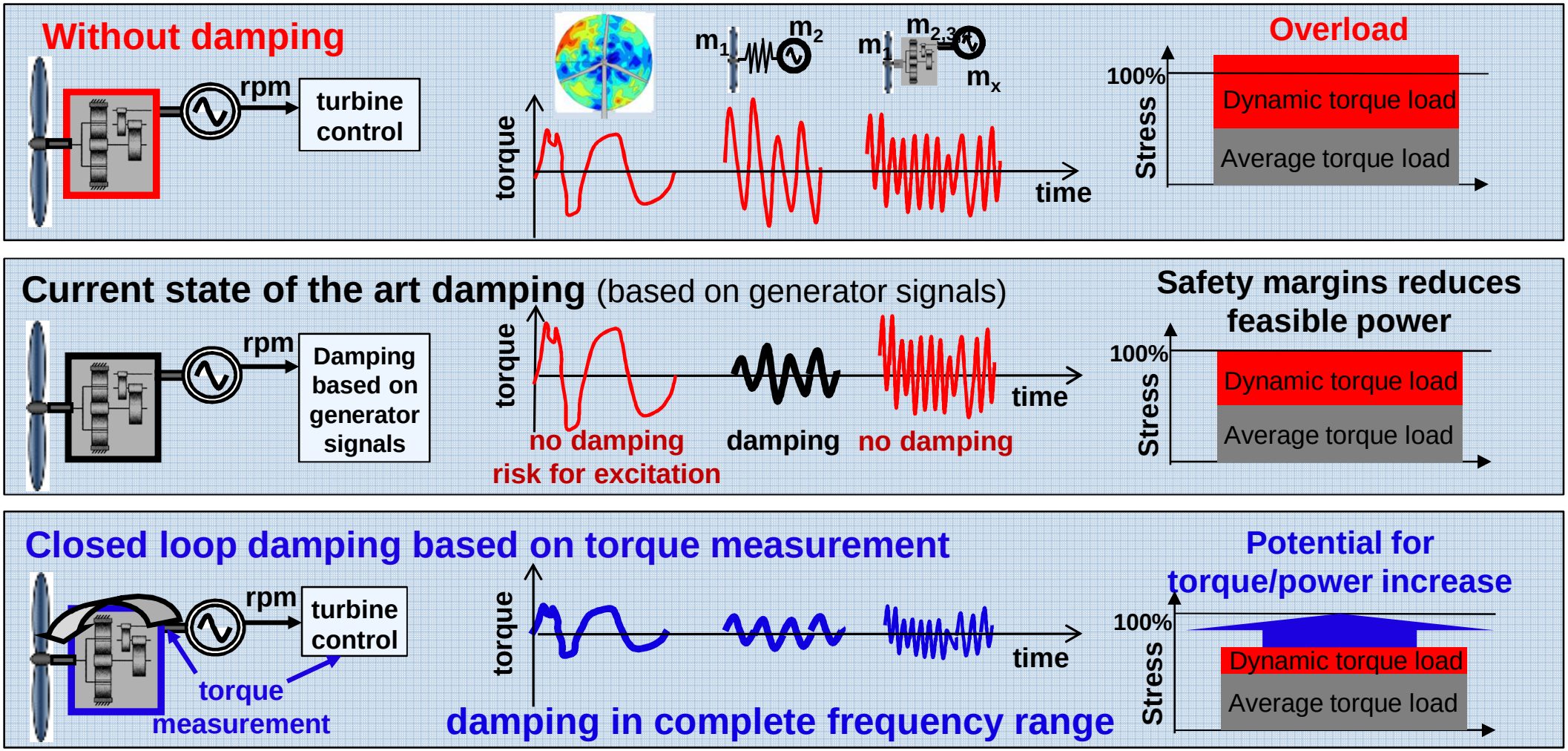

Optimal Drive Train Load Reduction Based On Closed Loop Control

Multi-Body-Simulation of a typical multi megawatt wind turbine

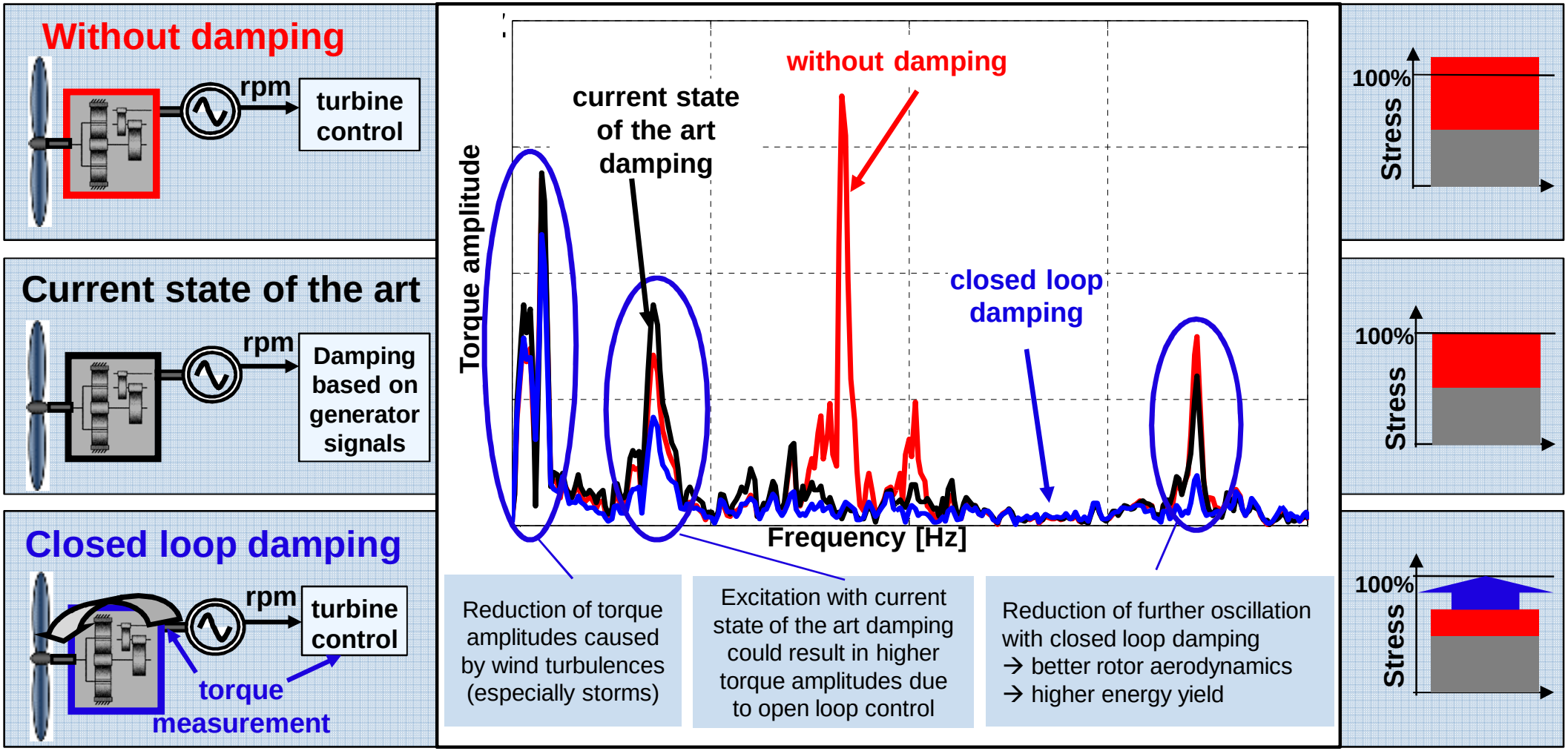

The Wind Power Gearbox As An Intelligent Mechanical System

Cloud services provide data overview, history and trends as well as:

- Automated detection of abnormalities
- Remaining lifetime calculations
- Remote monitoring information

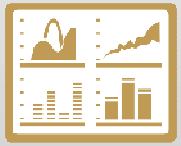

OEM and operator benefits:
-> ZF enables the reduction of the Cost of Energy sustainably by:

- Minimizing Operational Expenditures
  - reduced stress and wear
  - demand-oriented maintenance
  - extended oil life cycles
- Optimizing the turbine performance

Contribution of Intelligent Performance Management to reducing the Cost of Energy

LCOE Drivers

AEP

Reliable & efficient operation

Performance increase

CAPEX

Lifetime extension

Value engineering

OPEX

Maintenance optimization

Increase availability

LCOE: Levelized Cost of Energy, AEP: Annual Energy Production, CAPEX: Capital Expenditure, OPEX: Operational Expenditure

Cloud-based Performance Management, Park Overview

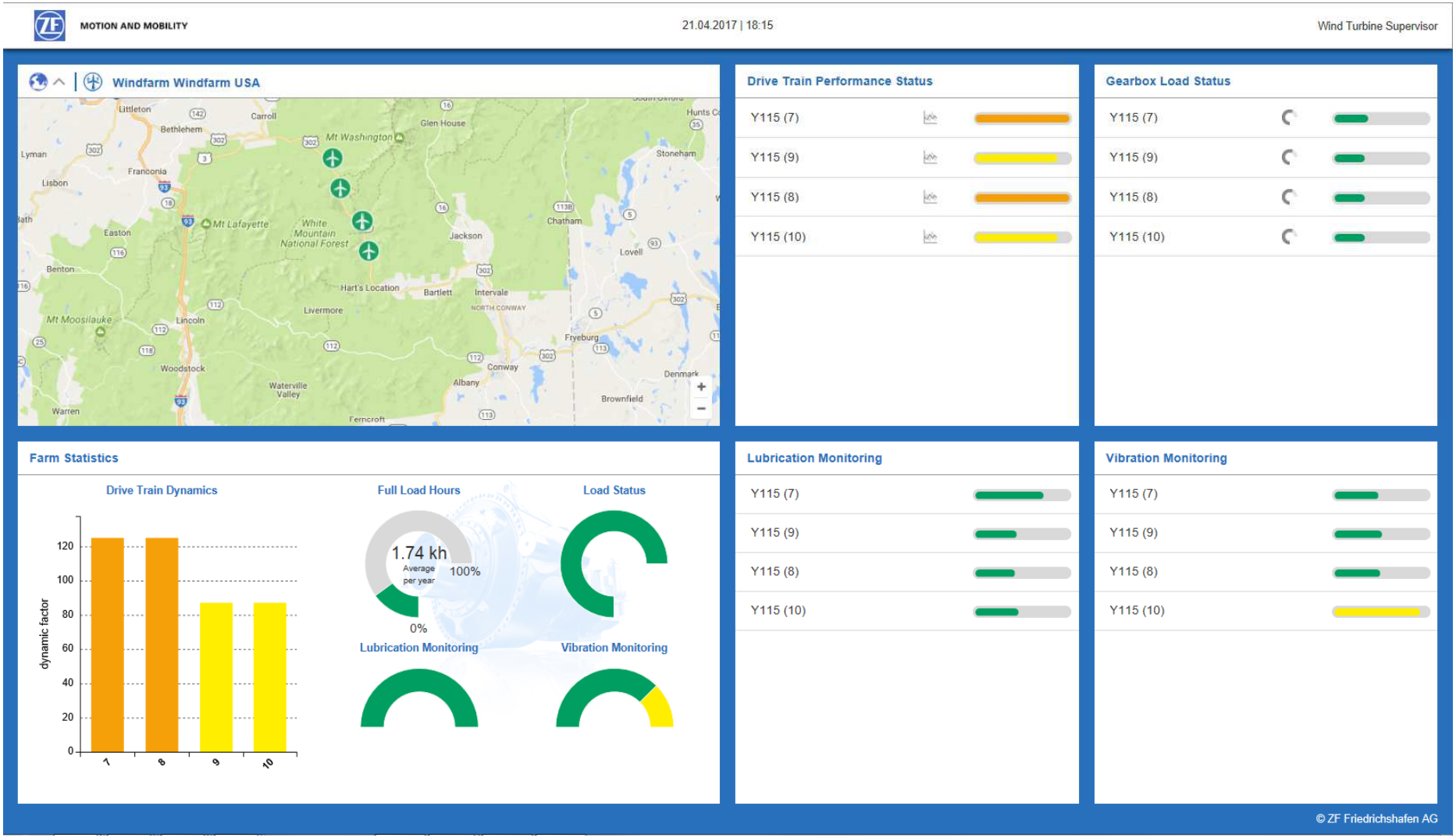

Drive Train Dynamics Dashboard

Power Group [kW]	Operating Hours [h]	Dynamic Factor [%]	Highest Dynamic FFT Amplitude [kNm]	Lowest Dynamic FFT Amplitude [kNm]
0 - 200	19	41	57	5
201 - 400	284	39	53	5
401 - 600	378	38	59	5
601 - 800	256	43	54	5
801 - 1000	191	48	65	5
1001 - 1200	152	53	59	6
1201 - 1400	122	58	87	6
1401 - 1600	111	62	73	6
1601 - 1800	112	67	57	7
1801 - 2000	196	71	60	8
2001 - 2200	467	69	67	8
2201 - 2400	0	0	n/a	n/a

Critical Drive Train Dynamics

Drive Train Dynamics

Power Group [kW]	Operating Hours [h]	Dynamic Factor [%]	Highest Dynamic FFT Amplitude [kNm]	Lowest Dynamic FFT Amplitude [kNm]
0 - 200	19	56	70	8
201 - 400	279	57	72	7
401 - 600	307	64	79	8
601 - 800	153	81	90	10
801 - 1000	87	96	83	11
1001 - 1200	59	109	95	13
1201 - 1400	57	118	96	15
1401 - 1600	80	117	92	11
1601 - 1800	141	114	94	12
1801 - 2000	208	119	105	14
2001 - 2200	467	110	100	13
2201 - 2400	0	0	n/a	n/a

Load based Lifetime Calculation

The Intelligent Gearbox

Intelligently designed <u>plus</u>
Intelligently operated and maintained

Making wind power the leading renewable energy source

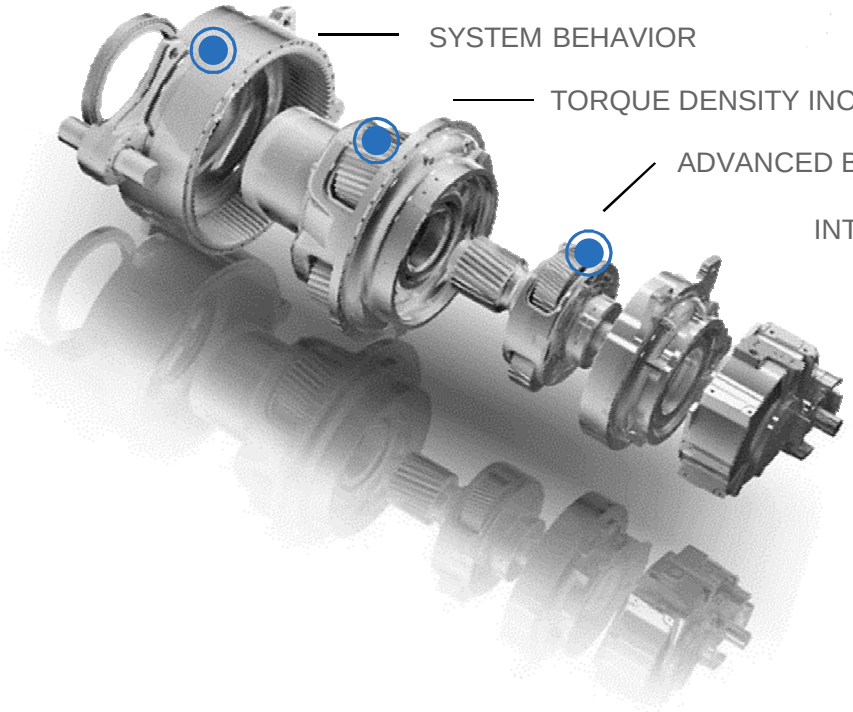

INTELLIGENT PERFORMANCE MANAGEMENT

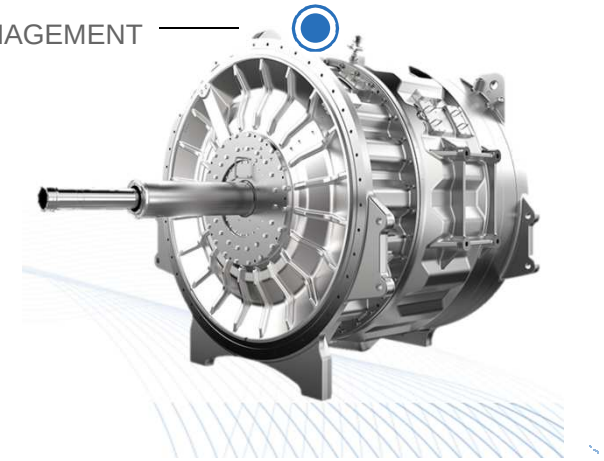

Thank you

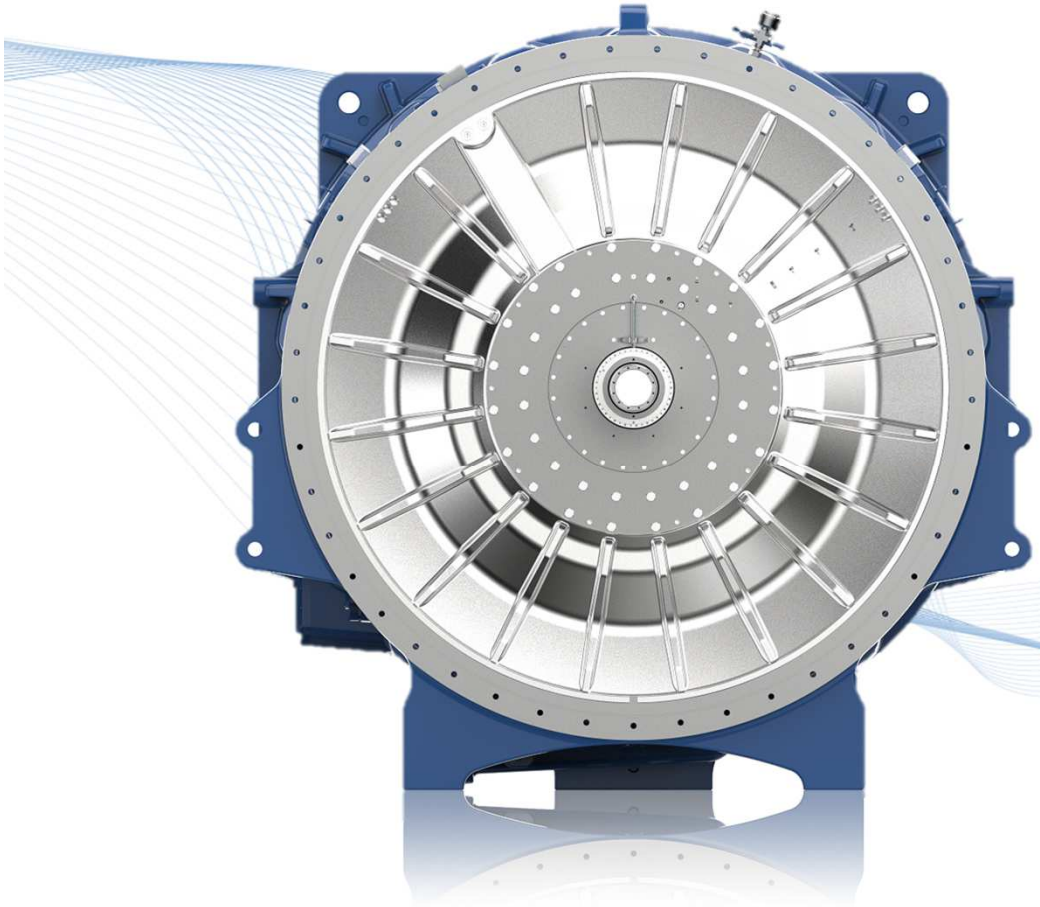

Meet you on our booth

Hall 25, A12